DMP-135 DOT-MATRIX PRINTER
SHEET # 1 (260-2866)
FAXBACK DOC # 10533

CONTINUED ON SHEET # 2

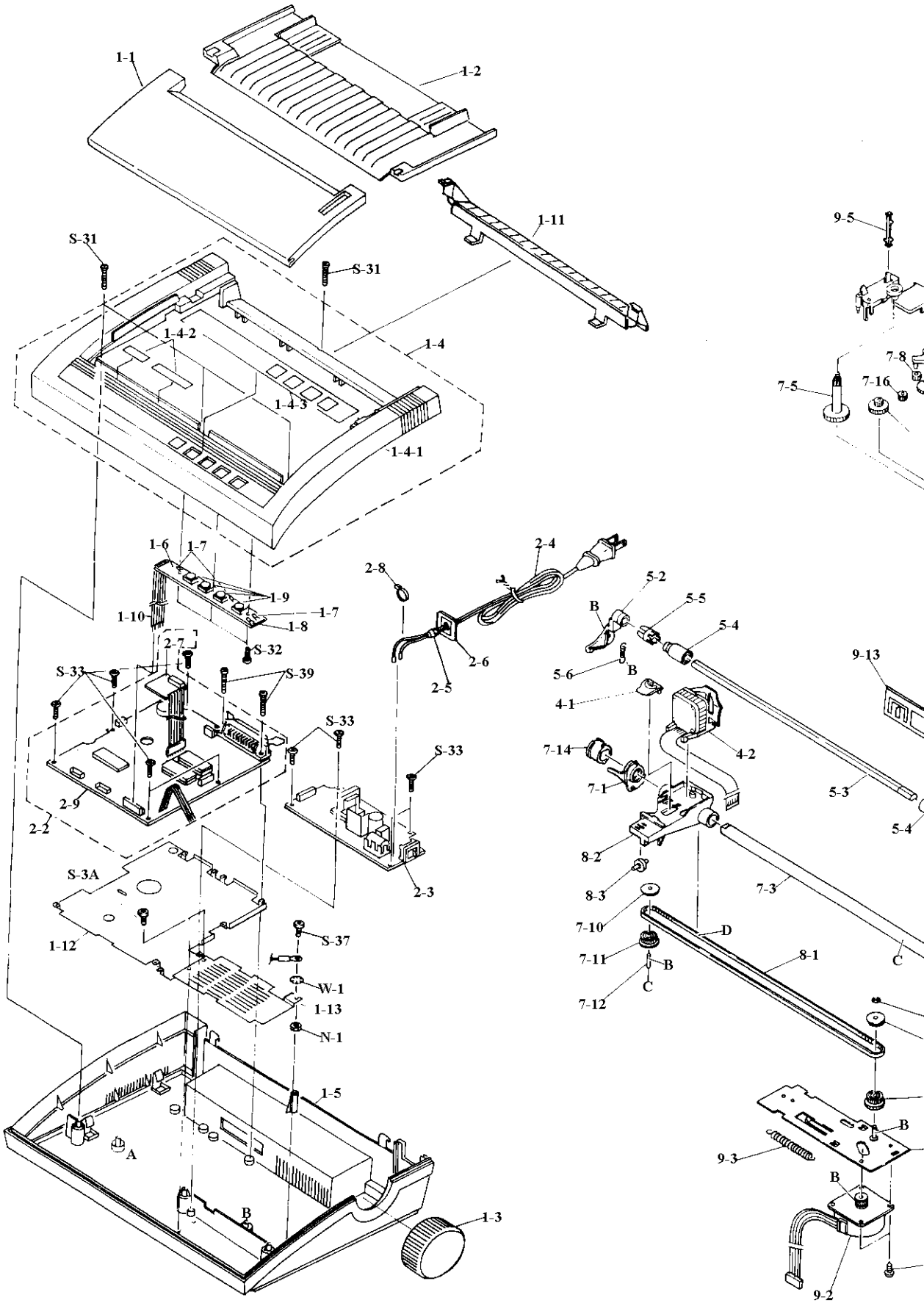

DMP-135 DOT-MATRIX PRINTER
SHEET # 2 (260-2866)
FAXBACK DOC # 10533
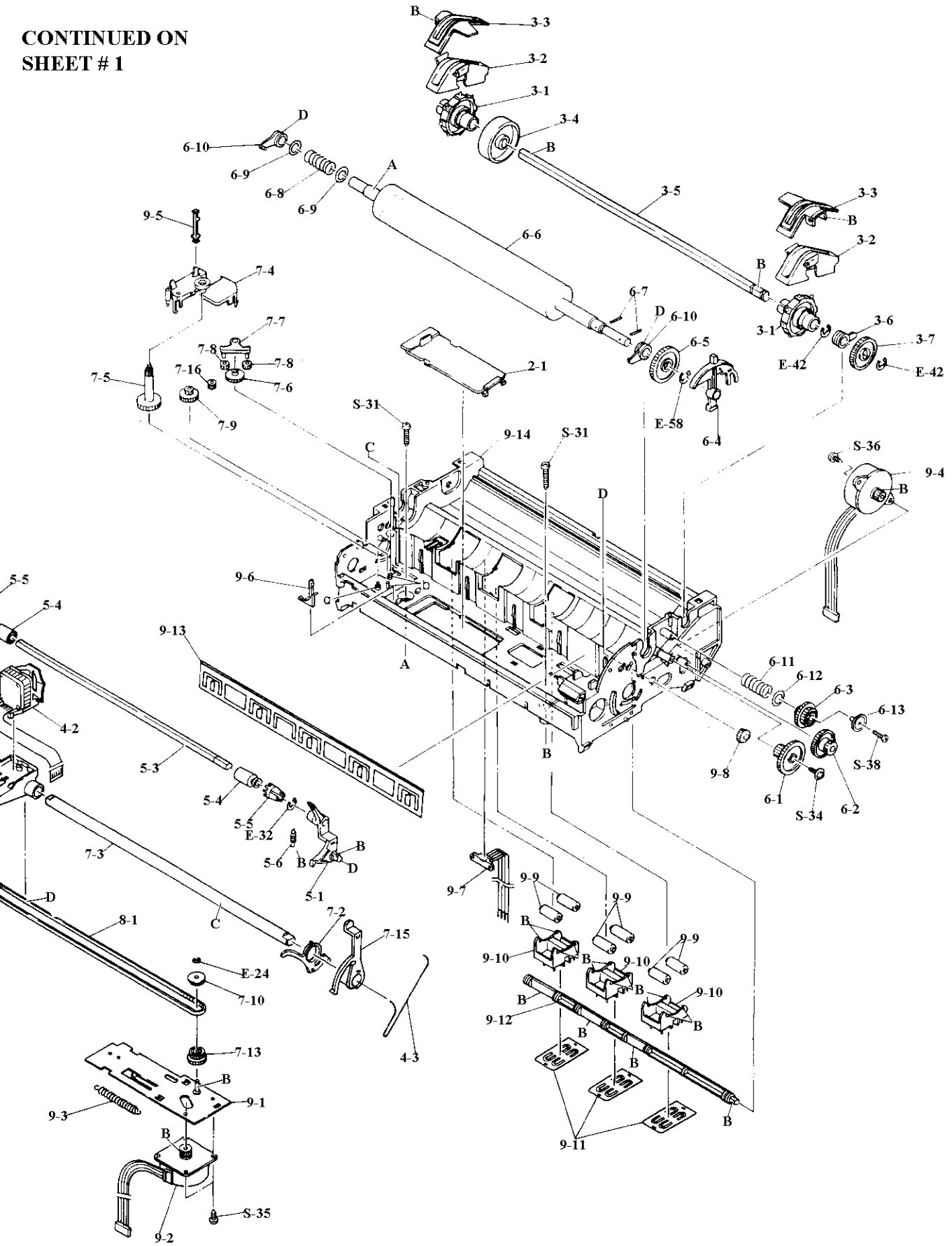
CONTINUED ON SHEET # 1